STAHL+BAND

SHOWN IN WALNUT FRAME WITH SEAT UPHOLSTERED IN BLACK LEATHER

SHOWN IN SANDBLASTED ASH FRAME WITH SEAT UPHOLSTERED IN WAXED LINEN

LOC DINING CHAIR

AVAILABLE WOOD FINISH OPTIONS

ASH

BLEACHED ASH

CHERRY

SANDBLASTED ASH

BLEACHED CHERRY

WHITE OAK

WALNUT

BLEACHED WHITE OAK

LEMON WALNUT

CHARRED RED OAK

LIST PRICE

ash
$1,795

bleached ash / cherry / white oak / walnut / sandblasted ash / charred red oak$1,925

bleached cherry / bleached white oak / lemon walnut$2,050

COM: 1 yard

DIMENSIONS

18 3/8" Width x 19 1/4" Depth x 32 1/2" Height

Seat height: 19"

*Please inquire for other custom finishes and sizing.

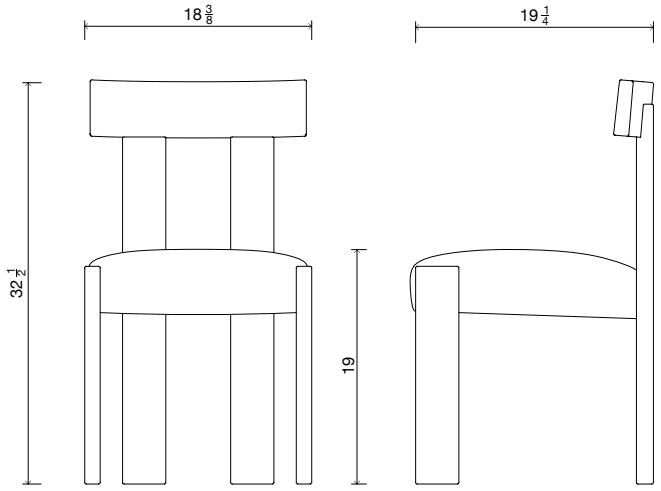

2308 Abbot Kinney Boulevard Venice CA 90291 | 424.228.4134 | info@stahlandband.com | www.stahlandband.com