Dubel Quad Bench shown in Vertical Grain Cedar (T1) and Rosemary Hallgarten Mohair "Antionette" in Creme Brulee.

DUBEL QUAD BENCH

Standard Dimensions	Overall: 74" L x 20" W x 19" H	
COM	4 yards	** Minimum 54" plain goods, non-reapeating pattern.*
Available Wood Finishes	*T1 White Oak* · *T1 Walnut* · *T1 Cherry* · *T2 Charred Red Oak*	** Additional S+B Wood Finishes available upon request.* *** Refer to S+B Material Guide for additional Finishes.*
List Price *	Tier 1 – $7,895 Tier 2 – $7,950	** List pricing is subject to change and does not include shipping*

Specification Drawing:

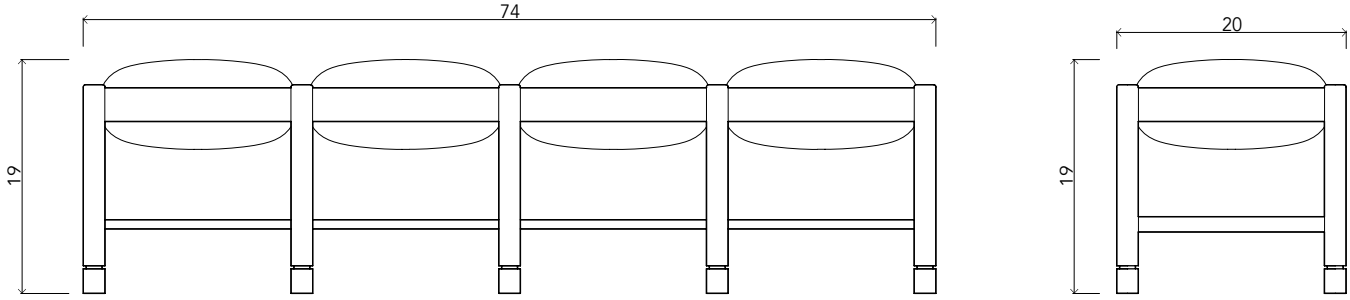

stahlandband.com
info@stahlandband.com
424.228.4134